Technical data

Input variables									
Operating voltage	U_S	18 ... 36 VDC [1]							
Residual ripple	U_{PP}	2.5 V (40 to 400 Hz)							
Current consumption	I_{max}	≤ 12 mA (with voltage output)							
Protection class		III							
Isolation resistance	R	>100 MΩ (500 VDC)							
Measurement range	p_N [bar]	10	50	100	160	250	315	400	630
Overload protection	p_{max} [bar]	25	100	200	320	500	630	800	1000
Bursting pressure	p [bar]	200	200	400	640	1000	1260	1600	2520
Output parameters									
Output signal and admissible load R_A	I_{Sig}	4 ... 20 mA $R_A = (U_S - 8.5\ V) / 0.0215\ A$ with R_A in Ω and U_S in V							
	U_{Sig}	0.1 ... 10 V, R_A > 2 kΩ							
Setting time (10 to 90 %)	t	< 1 ms							
Accuracy (characteristic curve deviation)		< 0.5 % related to the complete measurement range, including non-linearity, hysteresis, zero point and end value deviation (corresponds to the measuring deviation according to IEC 61298-2)							
Temperature coefficient (TC) for zero point and range – within the nominal temperature range – outside of the nominal temperature range		 < 0.1 % / 10 K < 0.2 % / 10 K							
Hysteresis		< 0.15 % [2]							
Non-repeatability		< 0.05 % [2]							
Long-term drift (1 year) under reference conditions		< 0.1 %							
Environmental conditions									
Nominal temperature range	ϑ	–20 ... +80 °C							
Ambient temperature range	ϑ	–40 ... +85 °C							
Storage temperature range	ϑ	–40 ... +100 °C							
Hydraulic fluid temperature range	ϑ	–40 ... +90 °C							
Other characteristics									
Pressure port [3]		G1/4 according to DIN 3852 form E, seal ring according to DIN 3869-14							
Housing material Throttle material Materials in contact with medium		V4A (1.4404), PEI, HNBR 1.4305 1.4542, 1.4305, NBR							
Throttle element		See ordering code (Highly dynamic effects in like pressure peaks or cavitation in hydraulic systems may damage the measuring cell. For these applications, devices with integrated throttle element [version "-N"] in the process interface have to be used) [4]							
Pressure media		HL, HLP, HFC, nitrogen [5], others upon request							
Tightening torque Measurement ranges < 400 bar	M_A	20 ... 25 Nm							
Tightening torque Measurement ranges ≥ 400 bar	M_A	25 ... 30 Nm							
Electrical connection		4-pole M12 connector at the housing [6]							
Protection class according to EN 60529		IP65/IP67 with mating connector correctly mounted and locked							
Weight	m	0.06 kg							
Life cycle		60 million load cycles or 60000 h							
Vibration load: – Transport shock according to DIN EN 60068-2-27 – Sine test according to DIN EN 60068-2-6 – Noise test according to DIN EN 60068-2-64		 15 g / 11 ms / 3 axes 10 ... 2000 Hz / maximum of 10 g / 10 cycles / 3 axes 20 ... 2000 Hz / 14 gRMS / 42 g peak / 24 h / 3 axes							

1) With cULus: max. of 30 VDC is admissible
2) Related to nominal temperature range
3) Thorough bleeding must be ensured
4) Only for device versions with throttle
5) Maximum of 300 bar is admissible
6) Recommendation: Use of shielded connection cable; see "Cable sets and mating connectors"

Technical data

Electro-magnetic compatibility (EMC) EN 61000-6-2 / EN 61326-2-3 – EN 61000-4-2 ESD – EN 61000-4-3 HF radiated – EN 61000-4-4 Burst – EN 61000-4-5 Surge – EN 61000-4-6 HF conducted – EN 61000-4-8 Magnetic field 50/60 Hz – EN 61000-4-9 Impulse magnetic field EN 61000-6-3 / EN 61326-2-3 – EN 55016-2-1 Interference voltage – EN 55016-2-3 Radio interference field strength	 4 kV CD / 8 kV AD with BWK B 10 V/m (80 ... 2700 MHz) with BWK A 2 kV with BWK B 1 kV / 42 Ω with BWK B 10 Veff (150 kHz ... 80 MHz) with BWK A 100 A/m with BWK A 1000 A/m with BWK A 0.15 ... 30 MHz, class A, EN 55022 30 ... 1000 MHz, class B, EN 55022
Conformity	CE according to the EMC directive
Approvals	cULus-listed Marine approval DNV-GL (For marine applications within the scope of marine approval, additional surge protection is required! Based on IACS-Unified Requirements E 10)

Electrical connection

4-pole M12 connector, view to connection side

Voltage		Current (two-wire system)	
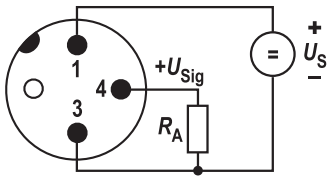	Values for U_S, R_A and U_{Sig}, see page 3	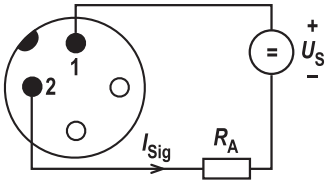	Values for U_S, R_A and I_{Sig}, see page 3

Unit dimensions (dimensions in mm)

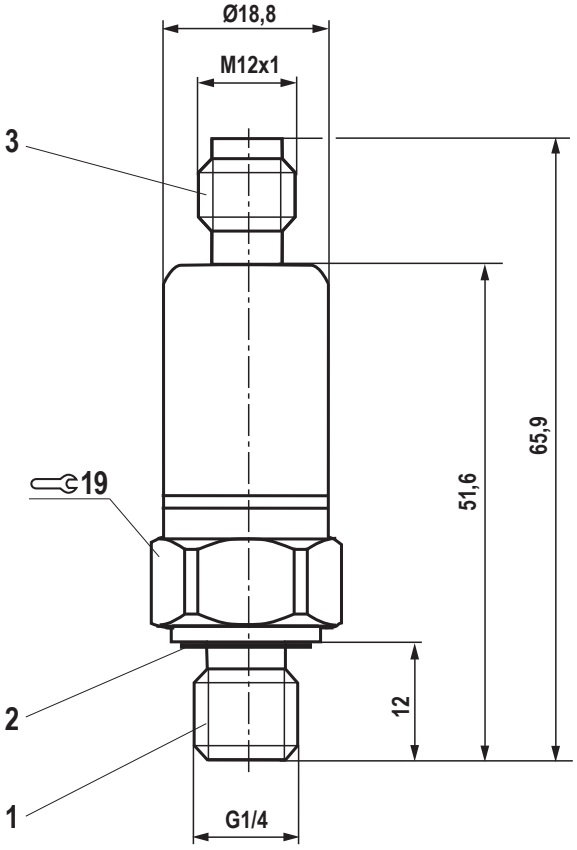

1 Pressure port G1/4 male thread
2 Seal ring
3 4-pole M12 connector

Bosch Rexroth AG
Industrial Hydraulics
Zum Eisengießer 1
97816 Lohr am Main, Germany
Phone +49 (0) 93 52/40 30 20
my.support@boschrexroth.de
www.boschrexroth.de

© All rights reserved to Bosch Rexroth AG, also regarding any disposal, exploitation, reproduction, editing, distribution, as well as in the event of applications for industrial property rights.
The data specified above only serve to describe the product. No statements concerning a certain condition or suitability for a certain application can be derived from our information. The information given does not release the user from the obligation of own judgment and verification.
Please note that our products are subject to a natural process of wear and aging.