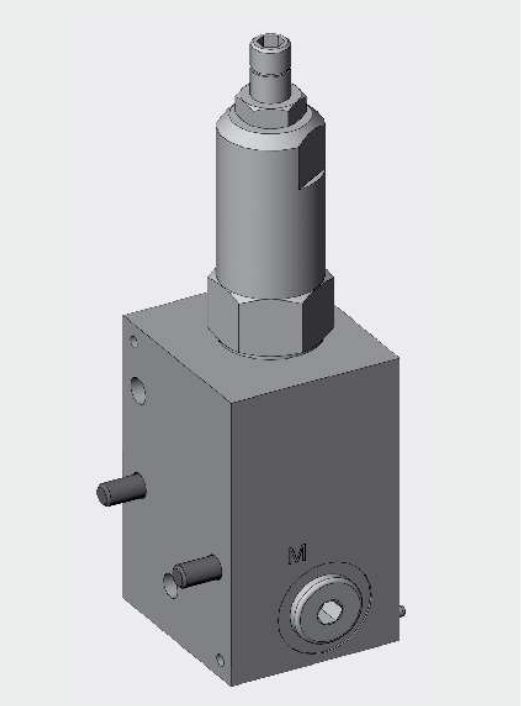

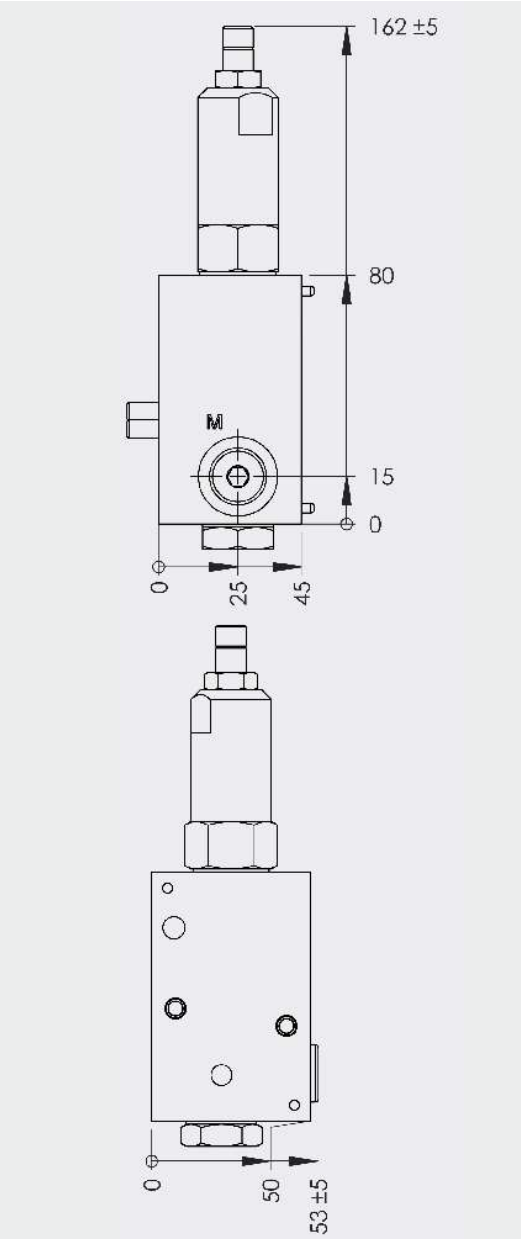

All dimensions are subject to technical modifications.

ML Function module for mounting onto base and function modules of ML valve stacking systems

ML-DM2 Function module with pressure reducing function (GA drg. 3153189)

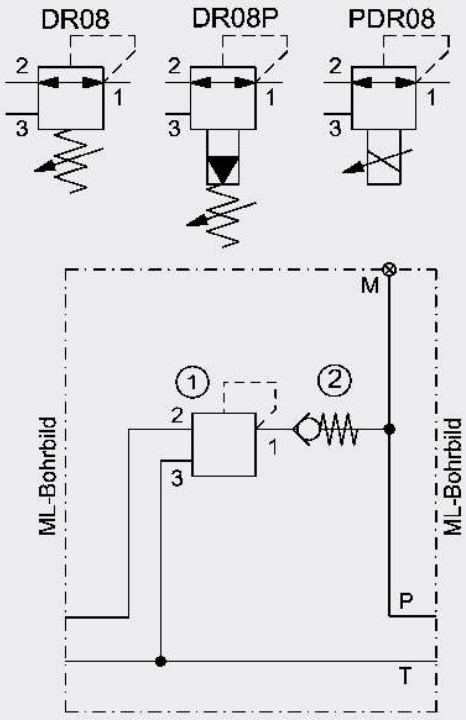

Function module to reduce pressure in central pressure line.
May be extended using ML function modules or end modules.

P_{max}	350 bar
Q_{max}	12 l/min
Interface:	ML / ML
Weight:	approx. 1.7 kg
Ports:	M = G¼"

Model code

① ②
ML-DM2 – S – R – XXX

Basic model
ML-DM2 = Function module DM2

Pressure reducing valves
S = pressure reducing valve, direct-acting DR08
V = pressure reducing valve pilot operated DR08P
P = pressure reducing valve, proportional PDR08

Check valve
no details = without check valve
R = check valve

Accessories, coil voltage
For accessories such as pressure gauge, pressure switch, etc. (supplied loose) see Section 4
no details = without accessories